DIETSCHE ROMAN by COLOMBO DESIGN

DIETSCHE ROMAN

BATH CONCEPTS 2009

PORTOFINO

Classic line

High quality

Brings ambiance to your bathroom

Premium chrome plated brass

Expressive forms

MADE IN ITALY

Guarantee 10 Years

Top Chrom

Towel holder
CB3209 chrome

Toilet roll holder
CB3291 chrome

Toilet brush set
CB3206 chrome

PORTOFINO is a collection full of sensations, atmosphere and harmony of design.
The high quality standards of PORTOFINO and its versatility offer innumerable combinations of very personalised bathroom interiors.

YOU CHOOSE!

decorative ring

in chrome or gold

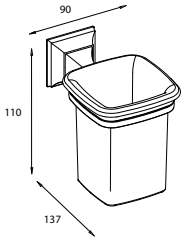

Tumbler and holder
frosted glass
110 x 90 x 137 mm

CB3202 chrome

Glass tumbler
106 x 90 x 90 mm

CB3252 frosted

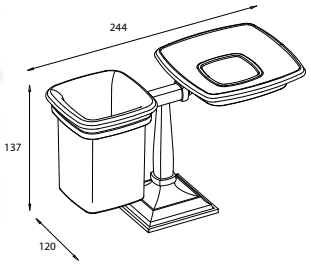

Soap dish and tumbler
frosted glass
standing
137 x 244 x 120 mm

CB3240 chrome

Glass tumbler
106 x 90 x 90 mm

CB3252 frosted

Replacement dish -glass-
22 x 120 x 120 mm

CB3251 frosted

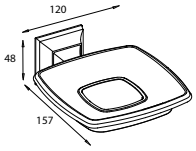

Soap dish and holder
frosted glass
48 x 120 x 157 mm

CB3201 chrome

Replacement dish -glass-
22 x 120 x 120 mm

CB3251 frosted

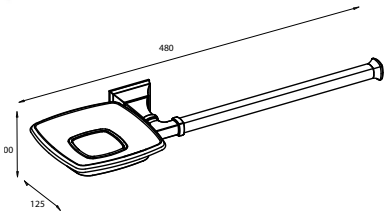

Towel holder
and soap dish for bidet
right or left
frosted glass
480 x 400 x 125 mm

B3274D right chrom *
B3274S left chrom *

Replacement dish -glass-
22 x 120 x 120 mm

CB3251 frosted

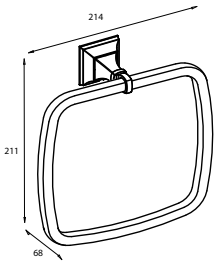

Towel ring
211 x 214 x 68 mm

CB3231 chrome

* Not available on stock

Measurements: height x width x depth

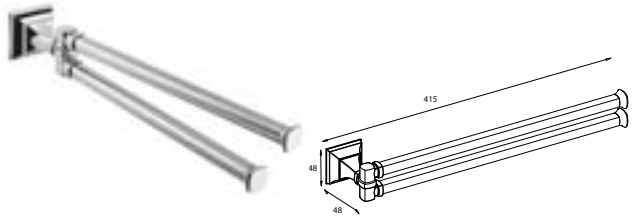

Double towel holder
48 x 48 x 415 mm

CB3212 chrome

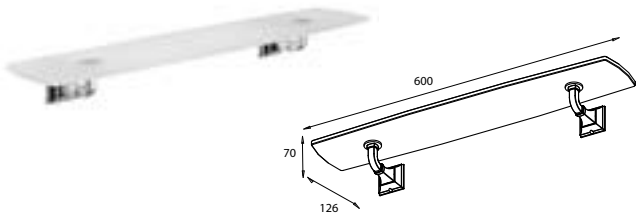

Glass shelf 60 cm
frostede glass
70 x 600 x 126 mm

CB3216 chrome

Replacement glass
26 x 600 x 200 mm

CB3261 frosted

Hook
little
26 x 26 x 35 mm

CCD87 chrome

Hook
large
48 x 48 x 58 mm

CCD97 chrome

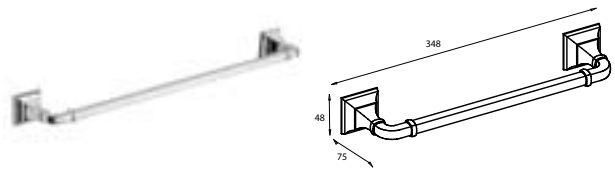

Towel holder 34,8 cm
48 x 348 x 75 mm

CB3209 chrome

Towel holder 44,8 cm
48 x 448 x 75 mm

CB3210 chrome *

Towel holder 54,8 cm
48 x 548 x 75 mm

CB3211 chrome

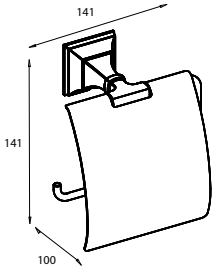

Toilet roll holder
with lid
141 x 141 x 100 mm

CB3291 chrome

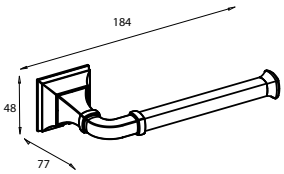

Toilet roll holder
without lid
right or left
48 x 184 x 77 mm

B3208D right chrome
B3208S left chrome

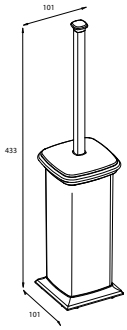

Toilet brush set
standing
metal handle
frosted glass
433 x 101 x 101 mm

CB3206 chrome

——

Replacement bowl -glass-
113 x 101 x 101 mm

CB3256 frosted

Replacement toilet brush
384 x 92 x 92 mm

CB3258 chrome

——

WC-brush head
172 mm

CB3257 chrome

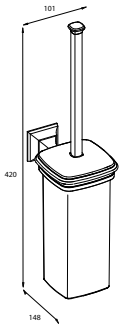

Toilet brush set
metal handle
frosted glass
420 x 101 x 148 mm

CB3207 chrome

——

Replacement bowl -glass-
200 x 101 x 101 mm

CB3250 frosted

Replacement toilet brush
384 x 92 x 92 mm

CB3258 chrome

——

WC-brush head
172 mm

CB3257 chrome

* Not available on stock

Measurements: height x width x depth

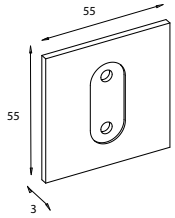

Ring
55 x 55 x 3 mm

CB3200CR chrome
CB3200OZ gold

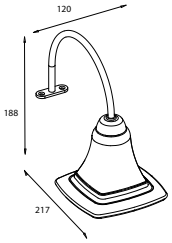

Lamp
for mirror
frosted glass
60 W/230 V
188 x 120 x 217 mm

CB1305 chrome *

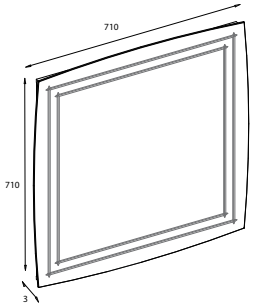

Mirror
switches on the side
and two-phase plug
710 x 710 x 3 mm

CB2016 chrome *

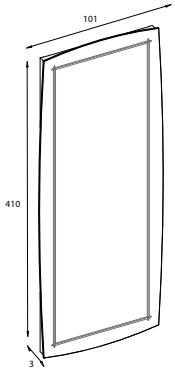

Mirror
switches on the side
and two-phase plug
101 x 410 x 3 mm

CB2018 chrome *

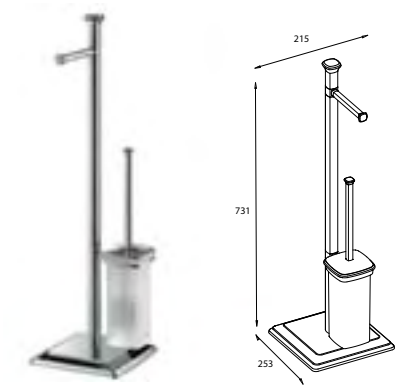

Bar
incl. toilet roll holder
and toilet brush set
frosted glass
731x 215 x 253 mm

CB3218 chrome *

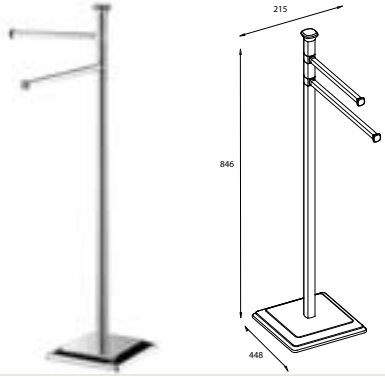

Bar
incl. 2 towel holders
846 x 215 x 448 mm

CB3238 chrome *

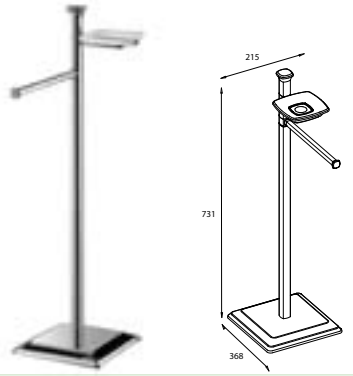

Bar
incl. soap dish
and towel holder
frosted glass
731 x 215 x 368 mm

CB3219 chrome *

* Not available on stock

Measurements: height x width x depth

RD 1406 Valid from 1.8.2008 until further notice. Errors and omissions excepted.

DIETSCHE
GEGR. 1873

Roman Dietsche GmbH
Kompetenz in Bad-Accessoires
Talstraße13 • 79674 Todtnau, Germany
Telefon: +49 (0) 7671-998-235
Telefax: +49 (0) 7671-998-247
info@dietsche.com • www.dietsche.com

Roman Dietsche GmbH
Competence in
bathroom accessories
Talstraße13 • 79674 Todtnau, Germany
Phone: +49 (0) 7671-998-235
Fax: +49 (0) 7671-998-247

Dietsche UK Ltd
Unit 6, Hemlock Park, Hyssop Close
Hawks Green, Cannock
WS11 7FB Staffordshire, England
Phone: +44 1543 469 831
info@dietsche.com • www.dietsche.com